S25-1MLC-A-2

SFP-Port 100BASE-FX Fiber GBIC, 2 km, Multi Mode

Overview

The KGS Fire & Security transceiver module is specifically designed to accommodate high-performance optical fiber, including integrated duplex data link over single mode. Compliant with the SFP Multisource Agreement (MSA), these transceiver modules feature hot-plug capability for easy installation without interrupting host equipment operating online. The SFP transceiver can install into KGS Fire & Security switch products with an 100Base-FX interface.



Details

- SFP multi-source agreement compliant
- Max data rate 155 Mbits/s
- Class 1 laser safety standard IEC 60825 compliant
- 1 fiber multimode
- LC connector
- Low power dissipation
- Plug-and-play capability for easy installation
- Hot Pluggable
- -40°C to +75°C operation temperature
- TTL signal detect indicator
- Single power supply 3.3V
- Comply with the IEEE 802.3ab

S25-1MLC-A-2

SFP-Port 100BASE-FX Fiber GBIC, 2 km, Multi Mode

Technische specificaties

General

Categorie	SFP
Type poort	Multi Modus
Aantal glasvezels	1
Poortsnelheid	100 Mbps
Golflengte	1310 nm, 1550 nm
Maximale afstand	2 km

Environmental

Bedrijfstemperatuur	-40 to +75°C
Opslagtemperatuur	-40 to +80°C
Relatieve vochtigheid	5% to 95% (non-condensing)

Regulatory

Conformiteit	CE, REACH, RoHS 2

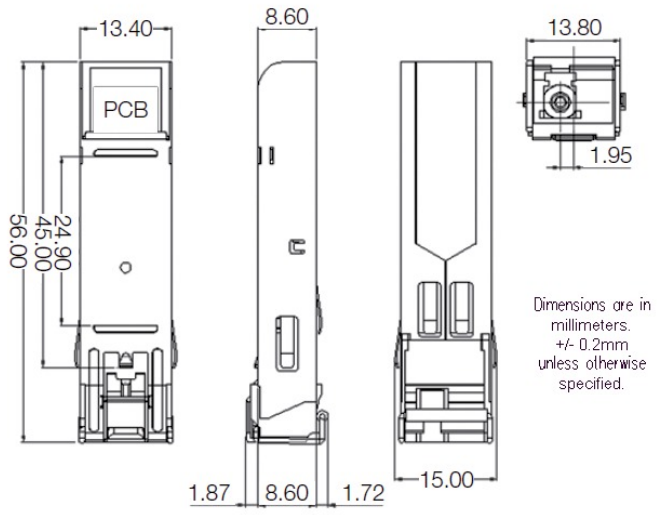

Als een bedrijf van innovatie behoudt Kidde Global Solutions zich het recht voor productspecificaties zonder kennisgeving te wijzigen. Ga voor de nieuwste productspecificaties online naar be.firesecurityproducts.com of neem contact op met uw verkoopvertegenwoordiger.

Last updated on 12 November 2026 - 20:20