TVD-5402

TruVision IP inomhusdomekamera, H.265/H.264, 3,0 Mpx, 2,8-12 mm motoriserad optik, WDR, äkta dag/natt, 30 m IR, ljud, larm, BNC, mikro SD/SHDC-plats, intelligens, POE (802.3-af)/12

Overview

The TruVision line of IP dome form factor cameras leverages the latest H.265 video compression technology to bring state of-the-art, high-definition pictures to the mass video surveillance market. With camera resolutions of 2, 3, or 5 megapixel, these IP cameras represent a flexible video surveillance device to meet any need. Equipped with advanced technology and signal processing capability, they effectively capture video under challenging conditions.

TruVision cameras utilize H.264 and/or H.265 compression technology with triple-streaming capability, making it easy to manage the camera's bandwidth usage. Motorized varifocal lens technology allows the user to remotely adjust the varifocal lens length and focus the camera with the touch of a button. Select models feature Super Low Light technology, which provides a clear image in low lighting conditions with a minimum of "grainy" interference. Recording to a local MicroSD card (not included) protects data in the event of network disruptions.

These cameras go above and beyond standard motion detection with enhanced alarm capabilities, including cross lines, intrusion, de-focus and face detection features. Each is user-configurable to best suit the installation environment. A Region of Interest function ensures specific portions of an image are given priority during instances of high network traffic or network degradation.

Location-specific functions include a Hallway View Mode to provide a portrait view of a hallway or corridor, a De-Fog Mode to help resolve images though fog or rain and Electronic Image Stabilization for installations subject to physical vibration or shaking.



Detaljer

- Maximum Resolution: 2048 × 1536
- Maximum Real Time Resolution: 2048 × 1536 @ 25 fps
- Designed to PSIA and ONVIF S open standards
- H.265 and/or H.264 compression with triple-streaming functionality
- Edge recording up to 128GB SDHC card
- 1/2.8" CMOS image sensor
- Motorized IR Cut Filter
- 0.008 Lux (Color)
- Motorized Lens 2.8 to 12mm
- Up to 30m IR illumination
- Up to 120dB Wide Dynamic Range
- Intelligence (Face detection, Audio Exception Detection, Intrusion Detection, De-focus Detection, Region of Interest (ROI), Electronic Image Stabilization (EIS), Defog, Scene Change Detection, Cross Line Detection, Advanced Motion Detection, Region Entrance Detection, Region Exit Detection, Object Removal, Object Left Behind, Object Counting)

TVD-5402

TruVision IP inomhusdomekamera, H.265/H.264, 3,0 Mpx, 2,8-12 mm motoriserad optik, WDR, äkta dag/natt, 30 m IR, ljud, larm, BNC, mikro SD/SHDC-plats, intelligens, POE (802.3-af)/12

Tekniska specifikationer

General

Technology	IP
Video standard	NTSC, PAL
Image settings	Hallway View, Mirror, ROI (Region Of Interest)
Video output	BNC Composite PAL / NTSC
Software compatibility	OnGuard, Prism, TruVision Navigator, TVRmobile, Web Browser

Camera

Sensor size	1/2.8"
Max. resolution	3 MP
Sensor scan	Progressive
Sensor type	CMOS

Lighting performance

WDR type	True WDR
Day/night	True Day/Night
Motorized IR cut filter	Yes
Infrared (IR)	Yes

Encoding

Sub stream compression	H.264, MJPEG
Sub stream resolutions	176 x 144 (QCIF), 352 x 288 (CIF), 704 x 576 (4CIF)

Lens

Lens type	Varifocal motorized
Auto iris	Yes
Auto focus	Yes
Motorized zoom	Yes

Network

Integration	CGI, ONVIF, PSIA
Supported network protocols	802.1x, DDNS, DHCP, DNS, ezDDNS, FTP, HTTP, HTTPS, IPv4, IPv6, NTP, PPPoE, QoS, RTP, RTSP, SMTP, SNMP, TCP/IP, UPnP

Audio

Audio compression	G.711, G.722.1, G.726, MP2L2

Alarm I/O

Alarm inputs	1

Storage

Local storage support	Yes

Video intelligence

Alarm trigger	Motion detection, Privacy Masking, Video tampering
Smart event	Advanced motion detection, Audio exception detection, Defocus, Defog, Electronic Image Stabilization (EIS), Face detection, Intrusion detection, Line crossing detection, Object counting, Object left behind, Object removal detection, Region entrance detection, Region exiting detection, Region of Interest (ROI), Scene change detection

Electrical

Power supply type	VDC

Physical

Colour	Grey
Form Factor	Dome

Environmental

Vandal proof	Yes
Impact rating	IK10
Environment	Indoor

Regulatory

Compliancy	CE, FCC, HALT, REACH, RoHS, UL, WEEE

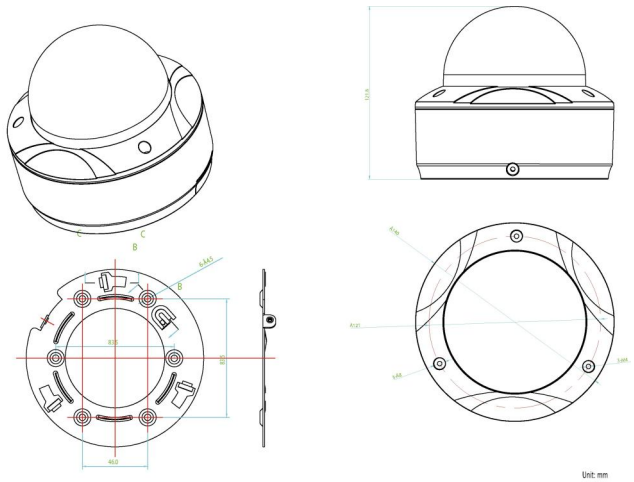

Kidde Global Solutions förbehåller sig rätten att ändra produktspecifikationer utan föregående meddelande. För de senaste produktspecifikationerna, besök se.firesecurityproducts.com online eller kontakta din försäljningsrepresentant.

Last updated on 12 November 2026 - 18:57