TVD-CB3A-W

TruVision 3-inch Cup Base for S6 and M Series varifocal turret IP cameras, white

Overview

With the TVD-CB3A-W cup base, M series turret IP TVGP-M01-0402-TUR-W camera can be installed on wall/pendant mount brackets TVD-SNB-W, TVD-CBW-W and TVD-PPB-W.



Details

- Compatible with TVGP-M01-0402-TUR-W M series varifocal white turret IP camera
- Compatible with wall/pendant mount brackets TVD-SNB-W, TVD-CBW-W and TVD-PPB-W
- Designed for convenient wiring

TVD-CB3A-W

TruVision 3-inch Cup Base for S6 and M Series varifocal turret IP cameras, white

Technical specifications

General

Bracket type	Kamera
Support type	TruVision mini kupler
Bracket mounting part	Spodek
Mount type	Vedhæng montering

Physical

Physical dimensions	Ø 140 x 66.6 mm
Net weight	220 g
Colour	Hvid
Material	Aluminium

Compatibility

Cameras	TVT-5608H / TVT-5609H / TVT-5610H / TVT-5611H Series 6 turret IP cameras
Wall/pendant mount brackets	TVD-SNB / TVD-CBW / TVD-PPB

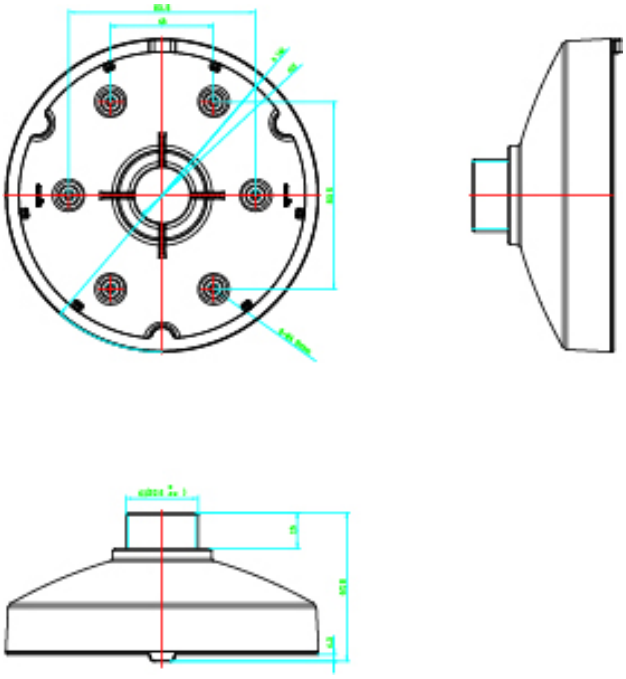

As a company of innovation, Kidde Global Solutions reserves the right to change product specifications without notice. For the latest product specifications, visit firesecurityproducts.com online or contact your sales representative.

Last updated on 13 August 2026 - 19:41