TVD-5402

TruVision IP Mini Dome Camera, H.265/H.264, 3.0MPX, 2.8 to 12mm motorized lens, WDR, True D/N, 30m IR, Audio, Alarm, BNC, micro SD/SHDC slot, Intelligence, POE (802.3-at)

Overview

The TruVision line of IP dome form factor cameras leverages the latest H.265 video compression technology to bring state of-the-art, high-definition pictures to the mass video surveillance market. With camera resolutions of 2, 3, or 5 megapixel, these IP cameras represent a flexible video surveillance device to meet any need. Equipped with advanced technology and signal processing capability, they effectively capture video under challenging conditions.

TruVision cameras utilize H.264 and/or H.265 compression technology with triple-streaming capability, making it easy to manage the camera's bandwidth usage. Motorized varifocal lens technology allows the user to remotely adjust the varifocal lens length and focus the camera with the touch of a button. Select models feature Super Low Light technology, which provides a clear image in low lighting conditions with a minimum of "grainy" interference. Recording to a local MicroSD card (not included) protects data in the event of network disruptions.

These cameras go above and beyond standard motion detection with enhanced alarm capabilities, including cross lines, intrusion, de-focus and face detection features. Each is user-configurable to best suit the installation environment. A Region of Interest function ensures specific portions of an image are given priority during instances of high network traffic or network degradation.

Location-specific functions include a Hallway View Mode to provide a portrait view of a hallway or corridor, a De-Fog Mode to help resolve images though fog or rain and Electronic Image Stabilization for installations subject to physical vibration or shaking.



Details

- Maximum Resolution: 2048 × 1536
- Maximum Real Time Resolution: 2048 × 1536 @ 25 fps
- Designed to PSIA and ONVIF Profile G and S open standards
- H.265 and/or H.264 compression with triple-streaming functionality
- Edge recording up to 128GB SDHC card
- 1/2.8" CMOS image sensor
- Motorized IR Cut Filter
- Low Light: Color: 0.008 Lux @ (F1.2, AGC ON), 0 Lux IR on
- Motorized Lens 2.8 to 12mm
- Up to 30m IR illumination
- Up to 120dB Wide Dynamic Range
- Intelligence (Face detection, Audio Exception Detection, Intrusion Detection, De-focus Detection, Region of Interest (ROI), Electronic Image Stabilization (EIS), Defog, Scene Change Detection, Cross Line Detection, Advanced Motion Detection, Region Entrance Detection, Region Exit Detection, Object Removal, Object Left Behind, Object Counting)

TVD-5402

TruVision IP Mini Dome Camera, H.265/H.264, 3.0MPX, 2.8 to 12mm motorized lens, WDR, True D/N, 30m IR, Audio, Alarm, BNC, micro SD/SHDC slot, Intelligence, POE (802.3-at)

Technical specifications

General

Technology	IP
Video standard	NTSC, PAL
Image settings	Widok korytarzowy, Lustro, Pole uwagi (ROI)
Video output	BNC Composite PAL / NTSC
Software compatibility	OnGuard, Prism, TruVision Navigator, TVRmobile, Web Browser

Camera

Sensor size	1/2.8"
Max. resolution	3 MP
Sensor scan	Progressive
Sensor type	CMOS
Total Pixels (H x V)	2048 x 1536
Effective pixels (H x V)	2048 x 1536
Digital S/N ratio	52 dB (AGC OFF)
Shutter time	Auto Exposure: 50 Hz: 1/3 to 1/100,000 s, 60 Hz: 1/3 to 1/100,000 s
IP Compression/Standard	H.265/ H.264 / MJPEG
Maximum Resolution (@ FPS)	2048 × 1536 (25 fps)
Maximum Real Time Resolution (@ FPS)	50Hz: 25 fps (2048 × 1536), 50 fps (1920 × 1080, 1280 × 960, 1280 × 720) 60Hz: 30 fps (2048 × 1536), 60 fps (1920 × 1080, 1280 × 960, 1280 × 720)
Multiple Streaming	Triple Streams
Video Bit Rate	128 Kbps to 16 Mbps, adjustable
Composite Output (BNC)	PAL, 1.0 Vp-p @ 75 ohm

Lighting performance

WDR type	True WDR
WDR	120 dB
Digital noise reduction	3D DNR
Day/night	Dzień/Noc z filtrem
Motorized IR cut filter	Yes
Color sensitivity	0.008 Lux @ (F1.2, AGC ON)
B/W sensitivity	0 lux with IR on
Infrared (IR)	Yes
IR sensitivity	0 lux with IR
IR range	Up to 30 m
IR wavelength	850 mm
Highlight compensation (HLC)	No

Encoding

Sub stream compression	H.264, MJPEG
Video bit rate	128kbps to 16Mbps
Sub stream resolutions	176 x 144 (QCIF), 352 x 288 (CIF), 704 x 576 (4CIF)
Max. resolution @ fps	2048 x 1536 @ 25 fps

Lens

Lens type	Zmienna zmotoryzowana
Focal length	2.8 to 12 mm
Auto iris	Yes
Auto focus	Yes
Motorized zoom	Yes
Control type	DC

Network

Integration	CGI, ONVIF, PSIA
Supported network protocols	802.1x, DDNS, DHCP, DNS, ezDDNS, FTP, HTTP, HTTPS, IPv4, IPv6, NTP, PPPoE, QoS, RTP, RTSP, SMTP, SNMP, TCP/IP, UPnP
PoE IEEE	802.3af
Standard & Integration	ONVIF Profile (G,S), PSIA, CGI

Audio

Audio compression	G.711, G.722.1, G.726, MP2L2
Audio in	1 Audio in / Mic in (line level)
Audio out	1
Audio bit rate	G.711ulaw, G.711alaw, MP2L2, G.726, PCM

Alarm I/O

Alarm inputs	1
Alarm outputs	1
Alarm I/O connection	Terminal Type

Storage

Local storage support	Yes
Local storage type	Built-in Micro SD/SDHC/SDXC card slot
Max. SD card capacity	128 GB

Video intelligence

Alarm trigger	Motion detection, Maskowanie stref prywatnych, Video tampering
Smart event	Zaawansowana detekcja ruchu, Audio exception detection, Utrata ostrości, Defog, Elektroniczna stabilizacja obrazu (EIS), Wykrycie twarzy, Wykrywanie włamania i napadu, Line crossing detection, Zliczanie obiektów, Pozostawiony obiekt, Object removal detection, Wykrywanie wejścia do regionu, Region exiting detection, Pole uwagi (ROI), Zmiana sceny

Electrical

Power supply type	VDC
Power supply value	12 VDC
Power consumption	9 W max.
Current consumption	750 mA
Voltage Input	POE (802.3af) /12 VDC
Auxiliary Power	50 mA @12 VDC Line level

TVD-5402

TruVision IP Mini Dome Camera, H.265/H.264, 3.0MPX, 2.8 to 12mm motorized lens, WDR, True D/N, 30m IR, Audio, Alarm, BNC, micro SD/SHDC slot, Intelligence, POE (802.3-at)

Physical

Physical dimensions	Ø 140 × 121.8 mm (5.51 × 4.79 in.)
Net weight	1400 g (3.09 lbs.)
Colour	Grå
Form Factor	Dome

Environmental

Vandal proof	Yes
Impact rating	IK10
Environment	Indendør
Operating temperature	-30 to +60°C (-22 to +140°F)
Storage temperature	-30 to 60°C (-22 to 140°F)
Relative humidity	<95% noncondensing

Regulatory

Compliancy	CE, FCC, HALT, REACH, RoHS, UL, WEEE

LocalStorage

Media	MicroSD/micro SDHC/ microSDXC

Camera Alarm

Input/Output	1 input / 1 output

Display

Display mode	N/A
OSD	N/A

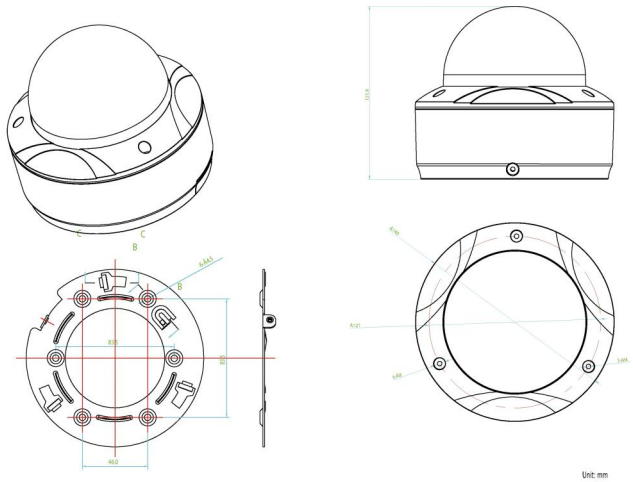

As a company of innovation, Kidde Global Solutions reserves the right to change product specifications without notice. For the latest product specifications, visit firesecurityproducts.com online or contact your sales representative.

Last updated on 16 June 2026 - 15:28