1-23911-K073

FireBeta XT Status Indicator with Key Switch

General

The FireBeta XT status units are accessories to the EN approved FireBeta XT/XT+ extinguishing control panels. They provide detailed status information via 6 high bright LEDs on the status of the extinguishant release control. A LED display shows a countdown of the time remaining in seconds until the extinguishant is released. Status units are normally mounted at various access points into the risk area for notification for safety purposes.

For systems where local control of the Automatic/Manual mode are required the 1-23911-K073 units are supplied with this control fitted. It allows the extinguishing system operation to be locally changed from automatic to manual mode on the status unit.



Output Functions

The following area statuses are signaled:
Manual only
Auto/Manual
Hold activated
Disabled
Imminent
Released

Input Funtions

Two supervised inputs are provided on every status unit.

•Auto/Manual control: An input is provided on the status unit to monitor a door interlock system. This provides additional safety for unmanned areas. Door monitoring interlocks may be fitted to all access points into the risk area which, when connected to the status unit, automatically changes the operating mode for the extinguishing area between automatic and manual status as the door is locked or unlocked.

•Extinguishing Hold control: By connecting a dedicated hold button to this input, activating this button allows the extinguishant release countdown to be stopped while the hold button is active.

Installation

Every status unit is provided in a rugged steel enclosure for surface mounting. Up to 7 status units may be connected to the FireBeta XT/XT+ control panel via a fully monitored RS485 communication link of up to 1200 m.

Details

- Certified to EN12094-1 when used with FireBeta XT control equipment
- High brightness LEDs
- Provides a detailed indication of the FireBeta XT/XT+ panel status
- Supervised, 2-wire RS485 data connection
- Countdown timer showing time remaining until release
- Manual only / Automatic & Manual mode select key switch
- Four wire connection (data and power)
- Robust, high quality surface mount enclosure
- Up to 7 units per panel
- Remote auto/manual door interlock and extinguishing hold supervised inputs
- Easy access to terminals for easy installation
- Internal fault diagnosis indicators
- Internal buzzer

1-23911-K073

FireBeta XT Status Indicator with Key Switch

Technical specifications

General

Status indicaton	LEDs & countdown timer
Compatibility	FireBeta XT/XT+
Connectivity	Two wire RS485
Communication ports	1

Electrical

Power supply type	VDC
Operating voltage	21 to 30 VDC
Current consumption	0.07 A (Max) 0.033 A (Quiescent)

Input

Input quantity	2
Input type and rating	Supervised, door monitor & extinguishing hold
Termination	6.8 kΩ ½ W resistor
Normal threshold	8 kΩ to 1 kΩ
Trigger threshold	700 Ω to 100 Ω
Short circuit threshold	99 Ω to 0 Ω

Physical

Form factor	Horizontal
Physical dimensions	186 x 132 x 50 mm
Net weight	1 kg
Colour	Grey
Mounting type	Wall mount
Cable entries	6
Material	Sheet steel
Material thickness	1.2 mm
Finish	Epoxy powder coated
Colour code	BS 00 A 05
Terminal capacity	2.5 mm²

Environmental

Vandal proof	No
Operating temperature	-5°C to +50°C
Relative humidity	< 95% (non condensing)
Environment	Indoor
IP rating	IP30

Regulatory

Compliancy	REACH, RoHS 2, WEEE
Certification	CE, EN12094-1

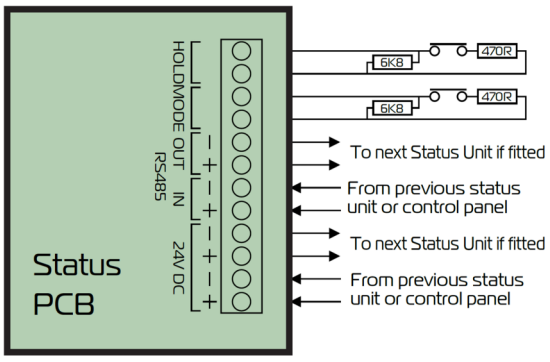

KIDDE GLOBAL SOLUTIONS

As a company of innovation, Kidde Global Solutions reserves the right to change product specifications without notice. For the latest product specifications, visit firesecurityproducts.com online or contact your sales representative.

Last updated on 27 April 2023 - 15:04