# S30-2SLC-10

## SFP-port Gigabit Mini GBIC transceiver module (1310 nm), 10 km, SM

### Product overview

The transceiver module is specifically designed to accommodate high-performance optical fiber, including integrated duplex data link over single mode. Compliant with the SFP Multisource Agreement (MSA), these transceiver modules feature hot-plug capability for easy installation without interrupting host equipment operating online. The SFP GBIC transceiver module can install into switch products with 100Base-FX or 1000Base-SX/LX SFP interface.



### Details

- SFP multi-source agreement compliant
- Data rate 1.25 Gbps
- Class 1 laser safety standard IEC 60825 compliant
- LC duplex receptacle
- Low power dissipation
- Plug-and-play capability for easy installation
- Hot Pluggable
- 0 to +50°C operation temperature
- TTL signal detect indicator
- Single power supply 3.3 V
- Comply with the IEEE 802.3ab

# S30-2SLC-10

## SFP-port Gigabit Mini GBIC transceiver module (1310 nm), 10 km, SM

## Technical specifications

### General

| | |
|---|---|
| Category | SFP |
| Port type | Enkelt Tilstand |
| No. of fibers | 2 |
| Port speed | Gigabit |
| Wavelength | 1310 nm |
| Maximum distance | 10 km |
| Data rate | 1.25 Gbps |
| PHY type | 1000 Base-LX |
| Power (dBm) | -9.5 to -3 |
| RX Sen. (dBm) | -20 |
| Power budget | 105 |
| Reliability (MTBF) | >50,000 hrs @ 25°C |

### Electrical

| | |
|---|---|
| Operating voltage | 3.3 VDC |
| AS/NZS CISPR 22 | 2006 |

### Physical

| | |
|---|---|
| Physical dimensions | 59 x 15 x 12.4 mm (W x D x H)<br>2.20 x 0.59 x 0.49 in. (W x D x H) |
| Net weight | 18 g<br>0.6 oz |

### Environmental

| | |
|---|---|
| Operating temperature | 0 to +50°C |
| Storage temperature | -40 to +85ºC |
| Relative humidity | 5% to 95% noncondensing |

### Transmitter Electro-Optical Interface

| | |
|---|---|
| EMI | EN 55022 CLASS A:2006+A1 : 2007 / EN61000-3-2:2006 / EN61000-3-3: 1995+A1:2001+A2:2005 |
| Optical output power | Min. -9.5 dBm, typical -- , max. -3 dBm |
| Power budget | 10.5 |
| Receiver | -20 dBm |

### Regulatory

| | |
|---|---|
| | IEEE 802.3ab Fast Ethernet Standard |
| | Class 1 laser product complies with EN 60825-1 |

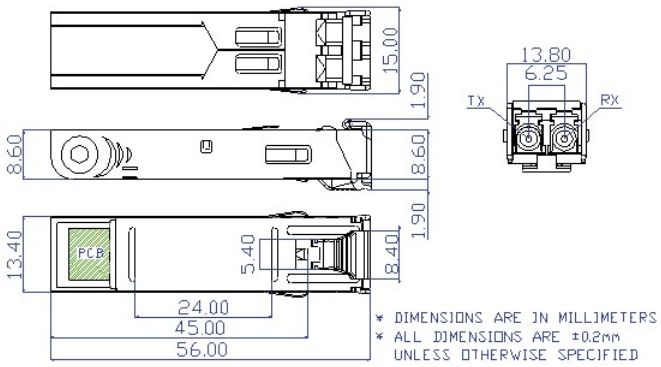


As a company of innovation, Kidde Global Solutions reserves the right to change product specifications without notice. For the latest product specifications, visit firesecurityproducts.com online or contact your sales representative.

Last updated on 16 June 2026 - 15:24